GOODWE

User Manual

Grid-Tied PV Inverter

SMT Series

(50-80kW)

V1.2-2025-01-16

Copyright ©GoodWe Technologies Co., Ltd., 2025. All rights reserved

No part of this manual can be reproduced or transmitted to the public platform in any form or by any means without the prior written authorization of GoodWe Technologies Co., Ltd.

Trademarks

GOODWE and other GOODWE trademarks are trademarks of GoodWe Technologies Co., Ltd. All other trademarks or registered trademarks mentioned are owned by their original owners.

Notice

The information in this user manual is subject to change due to product updates or other reasons. This manual cannot replace the product labels or the safety precautions unless otherwise specified. All descriptions in the manual are for guidance only.

CONTENT

1 About This Manual 1
1.1 Applicable Model 1
1.2 Target Audience 1
1.3 Symbol Definition 1

2 Safety Precaution 1
2.1 General Safety 2
2.2 DC Side 2
2.3 AC Side 3
2.4 Inverter Installation 3
2.5 Personnel Requirements 4

3 Product Introduction 4
3.1 Application Scenarios 4
3.2 Circuit Diagram 5
3.3 Supported Grid Types 6
3.4 Appearance 7
3.4.1 Parts 7
3.4.2 Dimensions 8
3.4.3 LED Indicators 8
3.5 Functionalities 9
3.6 Inverter Operation Mode 11
3.7 Nameplate 12

4 Check and Storage 13
4.1 Check Before Receiving 13
4.2 Package Contents 13
4.3 Storage 14

5 Installation 14
5.1 Installation Requirements 14
5.2 Inverter Installation 17
5.2.1 Moving the Inverter 17
5.2.2 Installing the Inverter 17

6 Electrical Connection 18

6.1 Safety Precautions 18
6.2 Connecting the PE Cable 20
6.3 Connecting the AC Output Cable 20
6.4 Connecting the PV Input Cable 22
6.5 Communication 24
6.5.1 RS485 Communication Networking 24
6.5.2 Power Export Limit 24
6.5.3 Connecting the Communication Cable 27
6.5.4 Installing the Smart Dongle 29

7 Equipment Commissioning 30
7.1 Checks before Power On 30
7.2 Power On 30

8 System Commissioning 31
8.1 Indicators and Button 31
8.2 Setting Inverter Parameters via LCD 32
8.2.1 LCD Menu Introduction 32
8.2.2 Inverter Parameter Introduction 34
8.3 Setting Inverter Parameters via App 36
8.4 Monitoring via SEMS Portal 36

9 Maintenance 37
9.1 Power Off the Inverter 37
9.2 Removing the Inverter 37
9.3 Disposing of the Inverter 37
9.4 Troubleshooting 38
9.5 Routine Maintenance 46

10 Technical Parameters 47

11 Term Explanation 53

1 About This Manual

This manual describes the product information, installation, electrical connection, commissioning, troubleshooting, and maintenance. Read through this manual before installing and operating the product. All the installers and users have to be familiar with the product features, functions, and safety precautions. This manual is subject to update without notice. For more product details and latest documents, visit www.en.goodwe.com.

1.1 Applicable Model

This manual applies to the listed inverters below (SMT for short):

Model	Nominal Output Power	Nominal Output Voltage
GW50K-SMT-L-G10	50kW	127/220, 3L/N/PE or 3L/PE
GW75K-SMT	75kW	380, 3L/N/PE or 3L/PE
GW80K-SMT	80kW	220/380, 230/400, 3L/N/PE or 3L/PE

1.2 Target Audience

This manual applies to trained and knowledgeable technical professionals. The technical personnel has to be familiar with the product, local standards, and electric systems.

1.3 Symbol Definition

Different levels of warning messages in this manual are defined as follows:

DANGER
Indicates a high-level hazard that, if not avoided, will result in death or serious injury.
WARNING
Indicates a medium-level hazard that, if not avoided, could result in death or serious injury.
CAUTION
Indicates a low-level hazard that, if not avoided, could result in minor or moderate injury.
NOTICE
Highlight and supplement the texts. Or some skills and methods to solve product-related problems to save time.

2 Safety Precaution

WARNING
The inverters are designed and tested strictly to comply with related safety rules. Read and follow all the safety instructions and cautions before any operations. Improper operation might cause personal injury or property damage.

2.1 General Safety

NOTICE

- The information in this document is subject to change due to product updates or other reasons. This manual cannot replace the product labels or the safety precaution unless otherwise specified. All descriptions here are for guidance only.
- Before installations, read through the user manual to learn about the product and the precautions.
- All installations should be performed by trained and knowledgeable technicians who are familiar with local standards and safety regulations.
- Wear anti-static gloves, cloths, and wrist strips when touching electronic components to protect the inverter from damage. The manufacturer shall not be liable for any damage caused by statis electricity.
- Strictly follow the installation, operation, and configuration instructions in this manual. The manufacturer shall not be liable for equipment damage or personal injury if you do not follow the instructions. For more warranty details, visit : https://en.goodwe.com/warranty.asp.

2.2 DC Side

⚠ DANGER

- Connect the DC cables using the delivered DC connectors and terminals. The manufacturer shall not be liable for the equipment damage if other connectors or terminals are used.
- Confirm the following information before connecting the PV string to the inverter. Otherwise, the inverter may be damaged permanently or even cause fire and cause personal and property losses. Above damage or injuries are not covered by the warranty.
  - Make sure that the positive pole of the PV string connects to the PV+ of the inverter. And the negative pole of the PV string connects to the PV- of the inverter.
  - For the models of GW75K-SMT, GW80K-SMT, the open circuit voltage of the PV string connected to each MPPT shall not exceed 1100V. When the input voltage is between 1000V and 1100V, the inverter enters the waiting mode. When the voltage returns to 180V-1000V, the inverter will resume normal operation.
  - For the models of GW50K-SMT-L-G10, the open circuit voltage of the PV string connected to each MPPT shall not exceed 900V.

⚠ WARNING

- Ensure that the PV module frames and the PV mounting system are securely grounded.
- Ensure that the DC cables are connected tightly and securely.
- The PV modules used with the inverter must have an IEC61730 class A rating.
- Make sure that the PV strings connected to the same MPPT should contain the same number of identical PV modules.
- To maximize the power generation of the inverter, please ensure that the Vmp of the PV modules connected in series is within the MPPT Voltage Range at Nominal Power of the inverter, as shown in the **Technical Parameters**.
- Make sure that the voltage difference between two MPPTs shall be less than 150 V.
- Make sure that the input current of each MPPT does not exceed the Max. Input Current per MPPT, as shown in the the **Technical Parameters**.
- When there are multiple PV string inputs, please connect them to as much inverter MPPTs as possible.

2.3 AC Side

WARNING

- The voltage and frequency at the connecting point should meet the on-grid requirements.
- An additional protective device like the circuit breaker or fuse is recommended on the AC side. Specification of the protective device should be at least 1.25 times the Max. output current of the inverter.
- Copper is recommended for the AC output cables. Aluminium cables are allowed, but only with the addition of copper to aluminium adapter terminals.

2.4 Inverter Installation

DANGER

- Do not apply mechanical load to the terminals, otherwise they can be damaged.
- All labels and warning marks must be clear and distinct after the installation. Do not block, alter, or damage any label.
- Warning labels on the inverter are as follows.

	HIGH VOLTAGE HAZARD. Disconnect all incoming power and turn off the product before working on it.		Delayed discharge. Wait 5 minutes after power off until the components are completely discharged.
	Read through the guide before working on this device.		Potential risks exist. Wear proper PPE before any operations.
	High-temperature hazard. Do not touch the product under operation to avoid being burnt.		Grounding point. Indicates the position for connecting the PE cable.
	CE marking		Do not dispose of the inverter as household waste.Discard the product in compliance with local laws and regulations, or send it back to the manufacturer.

2.5 Personnel Requirements

NOTICE
• Personnel who install or maintain the equipment must be strictly trained, learn about safety precautions and correct operations. • Only qualified professionals or trained personnel are allowed to install, operate, maintain, and replace the equipment or parts.

3 Product Introduction

3.1 Application Scenarios

The SMT inverter is a three-phase PV string grid-tied inverter. The inverter converts the DC power generated by the PV module into AC power and feeds it into the utility grid. The intended use of the inverter is as follows:

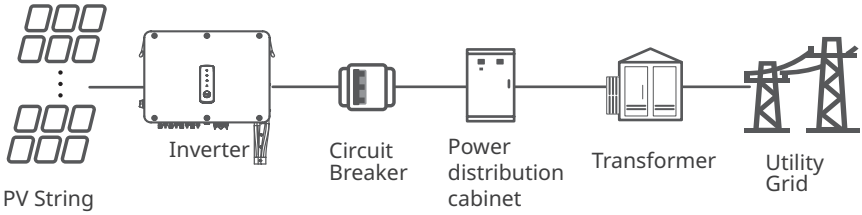

Model Description

GW50K-SMT-L-G10

1 2 3 4 5

No.	Referring to	Explanation
1	Brand code	GW：GoodWe
2	Rated power	50K：the rated power is 50kW 75K：the rated power is 75kW 80K：the rated power is 80kW
3	Series code	SMT: SMT Series
4	Grid Type	The default is omitted, and L indicates support for 127V/220V grid voltage.
5	Version code	The inverter version is 1.0

3.2 Circuit Diagram

The circuit diagram for GW50K-SMT-L-G10, GW75K-SMT:

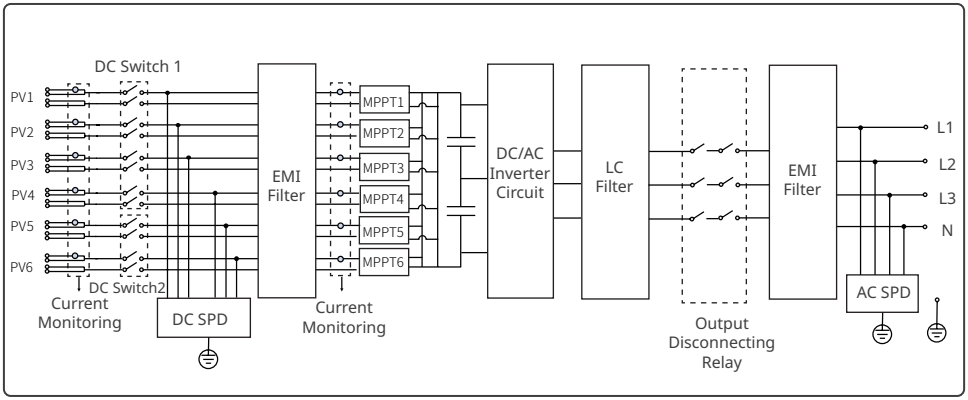

3.3 Supported Grid Types

NOTICE
For the TT grid structure, the effective value of the voltage between the neutral wire and the ground wire must be less than 20V.

The grid structures supported by the inverters are TN-S, TN-C,TN-C-S, TT, IT, as shown in the figure below:

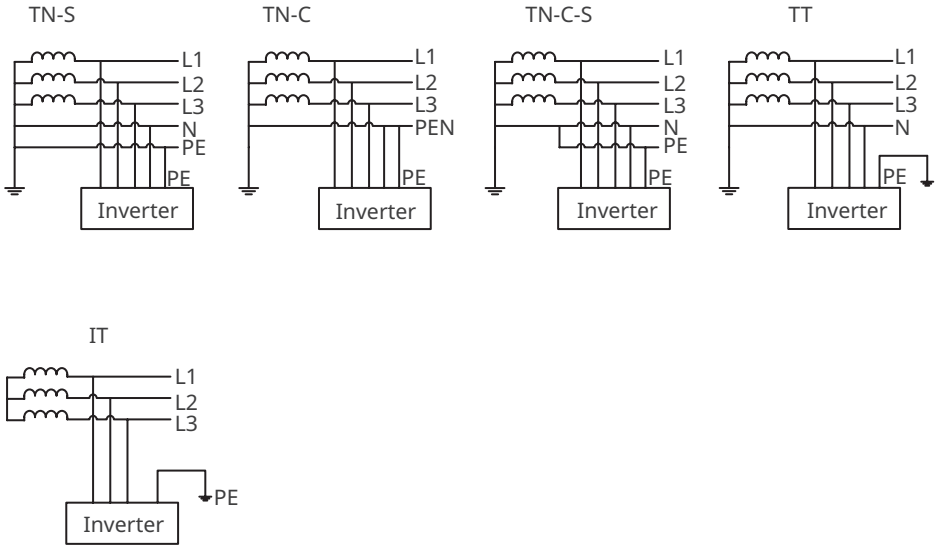

3.4 Appearance

3.4.1 Parts

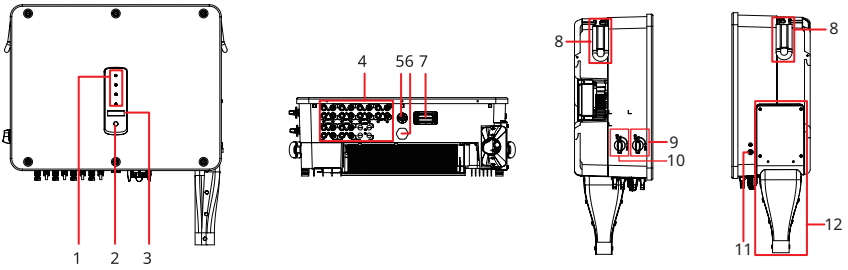

No.	Parts	Description
1	Indicator	Indicates working state of the inverter.
2	Button (optional)	To control contents displayed on the screen.
3	LCD (optional)	To check the parameters of the inverter.
4	DC Input Port	To connect the PV module DC input cables.
5	USB Port	To connect the smart dongle such as WiFi, 4G, and so on.
6	Ventilation valve	For waterproofing, ventilation, and to balance the internal and external air pressure.
7	Communication Port	To connect the RS485, RCR, Remote Shutdown, etc, communication signal cable.
8	Handle	Used to move the inverter
9	DC Switch 1	To start or stop the DC inputs of MPPT1/2/3/4.
10	DC Switch 2	To start or stop the DC inputs of MPPT5/6.
11	Grounding Port	To connect the PE cable.
12	AC output protection combination	To protect AC output cable connection unit.

3.4.2 Dimensions

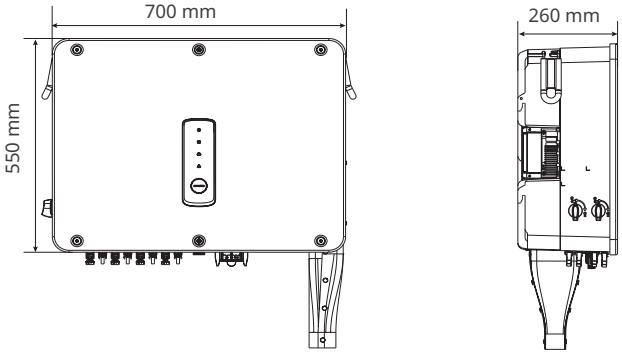

3.4.3 LED Indicators

Indicator	Status	Description
⏻		ON = THE INVERTER IS POWERED ON
		OFF = THE INVERTER IS POWERED OFF
▶		ON = THE INVERTER IS FEEDING POWER TO THE GRID
		OFF = THE INVERTER IS NOT FEEDING POWERTO THE GRID
		SINGLE SLOW FLASH = SELF CHECK BEFORE CONNECTING TO THE GRID
		SINGLE FLASH = CONNECTING TO THE GRID
☁		ON = WIRELESS IS CONNECTED/ACTIVE
		BLINK 1 = WIRELESS SYSTEM IS RESETTING
		BLINK 2 = WIRELESS ROUTER PROBLEM
		BLINK 4 = WIRELESS SERVER PROBLEM
		BLINK = RS485 IS CONNECTED
		OFF = WIRELESS IS NOT ACTIVE
⚠		ON = A FAULT HAS OCCURRED
		OFF = NO FAULT

3.5 Functionalities

AFCI (Integrated in Brazil, Optional in other countries)

Inverters with AFCI functionality has built-in current sensors to detect the high frequency current signals and decide whether an electric arc occurs. If there is, the inverter is able for self-protection automatically.

Reason to occur electric arcs:

- Damaged connectors in PV system.
- Wrong connected or broken cables.
- Aging connectors and cables.

Method to detect electric arcs:

- When the inverter detects an electric arc, users can check the fault via LCD or SolarGo App.
- The alarm can be cleared automatically after 5 minutes if the inverter triggers a fault less
- than 5 times within 24 hours. The inverter will shutdown for protection after the 5th electric
- arc fault. The inverter cannot work normally until the fault is solved. For details, refer to the **SolarGo App User Manual**.

PID Recovery (Optional)

During the operation of PV panels, there is a potential difference between the output electrodes and the grounded frame of the panels. Over an extended period, this can lead to a decrease in the power generation efficiency of the panels, which is known as the Potential Induced Degradation (PID) effect.

The PID function of this unit operates by elevating the voltage differential between the PV panels and their frames to a positive value (termed as positive-voltage elevation). This effectively suppresses the PID effect and is applicable to P - type PV panels as well as N-type PV panels that necessitate positive - voltage elevation for PID suppression. For N - type PV panels that demand negative - voltage reduction to suppress the PID effect, it is advisable to deactivate this function. Regarding whether an N - type module falls into the category that requires positive - voltage elevation for PID suppression, please consult the module supplier.

Reactive power compensation at night (Optional)

To improve the power factor of the plant at night, the inverter supports night SVG（Static Var Generator） function. The power station monitoring platform issues a reactive power compensation command via which ensure the inverter keep working in reactive power status even when there active power output.

Communication

The inverter supports: parameter setting via Bluetooth; connection to the SMES monitoring platform via WiFi, 4G, or WiFi+LAN, thus monitoring the operations of the inverter and the power plant, etc. via SMES App.

- Bluetooth (Optional): meets Bluetooth 5.1 standard.
- WiFi: supports 2.4G frequency band. Set the router to 2.4G or 2.4G/5G coexistence mode. 40 bytes for router wireless signal name maximumly.
- LAN (Optional): supports connecting to the router via LAN communication, and then connecting to the monitoring platform.
- 4G (Optional): supports connected to the monitoring platform via 4G communication.

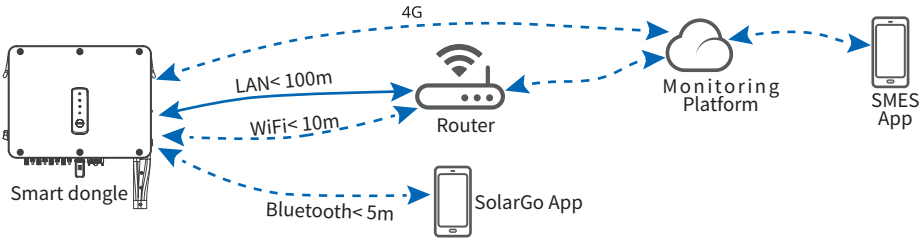

RSD (Optional)

In the rapid shutdown system, the receiver and transmitter work together to shutdown the PV system rapidly. The receiver maintains the modules working by continuously receiving aheartbeat signal from a transmitter. The transmitter can be external or integrated irto the inverter. In case of an emergency, you can enable the external initiator to shut down the transmitter, by which the RSD will stop working and the modules be shut dowm.

- External transmitter:

1. Models of the transmitter: GTP-F2L-20, GTP-F2M-20
https://www.goodwe.com/Ftp/Installation-instructions/RSD2.0-transmitter.pdf
2. Models of the receiver: GR-A1F-20, GR-B1F-20, GR-A2F-20, GR-B2F-20
https://en.goodwe.com/Ftp/EN/Downloads/User%20Manual/GW_RSD-20_Quick-Installation-Guide-POLY.pdf

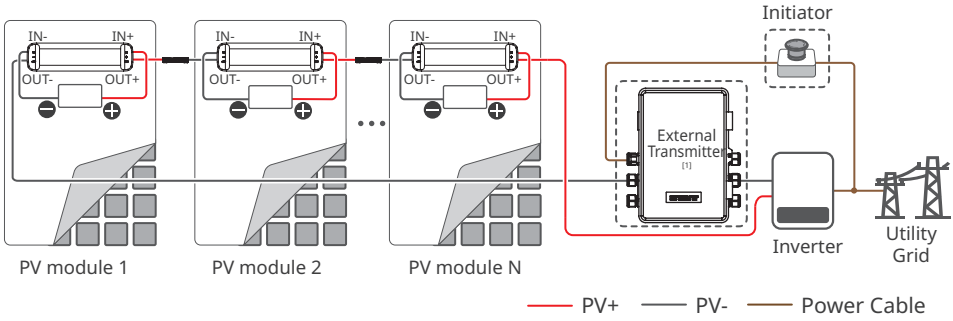

- Integrated transmitter:

1. External initiator: A breaker on the AC side
2. Models of the receiver: GR-A1F-20, GR-B1F-20, GR-A2F-20, GR-B2F-20
https://en.goodwe.com/Ftp/EN/Downloads/User%20Manual/GW_RSD-20_Quick-Installation-Guide-POLY.pdf

3.6 Inverter Operation Mode

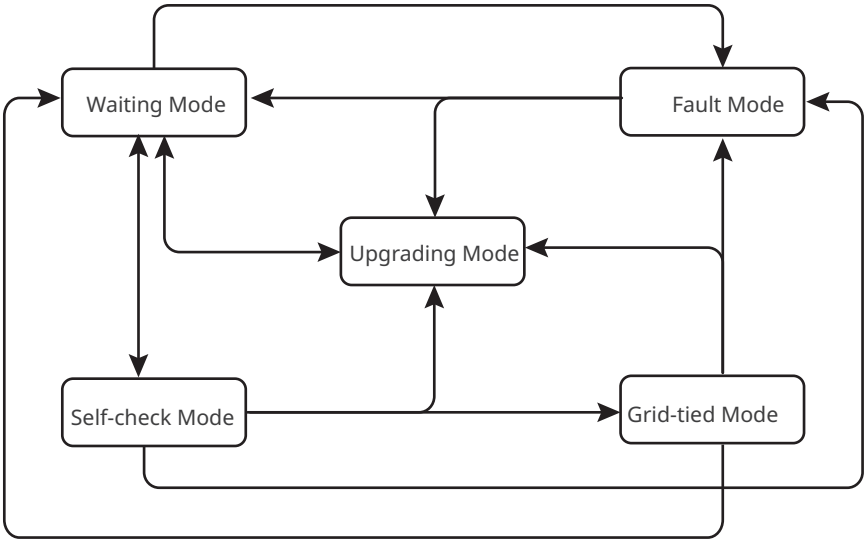

No.	Mode	Description
1	Waiting Mode	Waiting stage after the inverter is powered on. • When the conditions are met, the inverter enters the self-check mode. • If there is a fault, the inverter enters the fault mode. • If received an upgrade request, the inverter enters the upgrading mode.
2	Self-check Mode	Before the inverter starts up, it continuously performs self-check, initialization, etc. • When the conditions are met, the inverter enters the grid-tied mode, and the inverter starts on-grid connection. • If received an upgrade request, the inverter enters the upgrading mode. • If the self-check does not passed, it enters the fault mode. • If a shutdown command is received or PV input energy is too low, the inverter enters the waiting mode.
3	Grid-tied Mode	The inverter has connected to the grid and is operating normally. • If a fault is detected, it enters the fault mode. • If received an upgrade request, the inverter enters the upgrading mode. • If a shutdown command is received, the inverter enters the waiting mode.
4	Fault Mode	If a fault is detected, the inverter enters the fault mode. When the fault is cleared, it enters the waiting mode. When the waiting mode ends, the inverter detects the running status and it enters the next mode.
5	Upgrading Mode	Inverters enter this mode when the firmware update process is initiated. After the upgrading, the inverter enters the waiting mode. When the waiting mode ends, the inverter detects the running status and it enters the next mode.

3.7 Nameplate

The nameplate is for reference only.

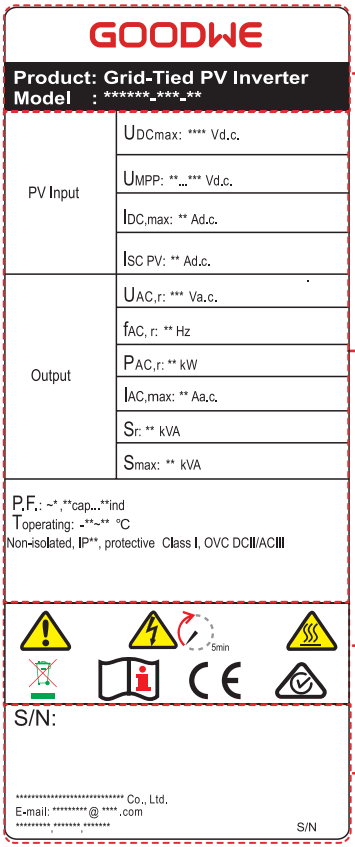

Goodwe trademark, product type, and product model

Technical parameters

Safety symbols and certification marks

Contact information and serial number

4 Check and Storage

4.1 Check Before Receiving

Check the following items before receiving the product.

1. Check the outer packing box for damage, such as holes, cracks, deformation, and others signs of equipment damage. Do not unpack the package and contact the supplier as soon as possible if any damage is found.
2. Check the inverter model. If the inverter model is not what you requested, do not unpack the product and contact the supplier.
3. Check the package content to make sure that the correct model is provided and there is no damage, and if nothing is missing. If that is not the case, contact the supplier.

4.2 Package Contents

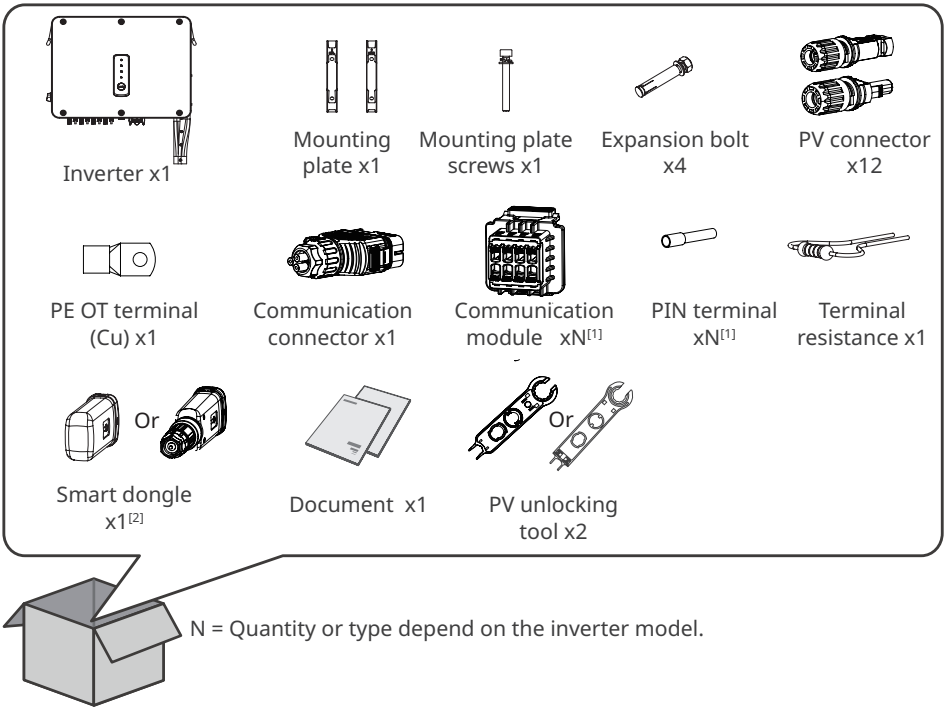

NOTICE

[1] Depending on the selected communication method, the number of built-in communication module can be either 1 or 2, while the number of pin terminals is between 8 and 16 respectively.
[2] Smart dongle types are available: WiFi/4G/Bluetooth/WiFi+LAN, etc. The actual delivered type depends on the selected inverter communication method.

4.3 Storage

If the equipment is not to be installed or used immediately, please ensure that the storage environment meets the following requirements:

1. Do not unpack the outer package or throw the desiccant away.
2. Store the equipment in a clean place. Make sure the temperature and humidity are appropriate and no condensation.
3. Follow the instructions on the packing box when stacking the inverters. Stack with caution to prevent them from falling over.
4. If the inverter has been long term stored, it should be checked by professionals before being put into use.
5. If the inverter has been stored for more than two years or has not been in operation for more than six months after installation, it is recommended to be inspected and tested by professionals before being put into use.
6. To ensure good electrical performance of the internal electronic components of the inverter, it is recommended to power it on every 6 months during storage. If it has not been powered on for more than 6 months, it is recommended to to be inspected and tested by professionals before being put into use.

5 Installation

5.1 Installation Requirements

Installation Environment Requirements

1. Do not install the equipment in a place near flammable, explosive, or corrosive materials.
2. Install the equipment on a surface that is solid enough to bear the inverter weight.
3. Install the equipment in a well-ventilated place to ensure good dissipation. Also, the installation space should be large enough for operations.
4. The equipment with a high ingress protection rating can be installed indoors or outdoors. The temperature and humidity at the installation site should be within the appropriate range.
5. Install the equipment in a sheltered place to avoid direct sunlight, rain, and snow. Build a sunshade if it is needed.
6. Do not install the equipment in a place that is easy to touch, especially within children's reach. High temperature exists when the equipment is working. Do not touch the surface to avoid burning.
7. Install the inverters far away from noise-sensitive areas, such as the residential area, school, hospital etc., in order to avoid the noises bothering people nearby.
8. Inverters installed in salt-damaged areas may suffer from corrosion. Salt-damaged areas refer to areas within 1000 m of the coast or affected by sea winds. The areas affected by sea wind vary depending on meteorological conditions (such as typhoons, seasonal winds) or terrain (with embankments, hills).
9. Install the equipment at a height that is convenient for operation and maintenance, electrical connections, and checking indicators and labels.
10. Install the inverter away from high magnetic field to avoid electromagnetic interference.If there is any radio or wireless communication equipment below 30MHz near the inverter, you have to:
    - Install the inverter at least 30m far away from the wireless equipment.
    - Add a low pass EMI filter or a multi winding ferrite core to the DC input cable or AC output cable of the inverter.
11. Please ensure that there are no obstacles directly in front of the outside fans outlet on the left side of the inverter so that the outside fans can be drawn out normally.

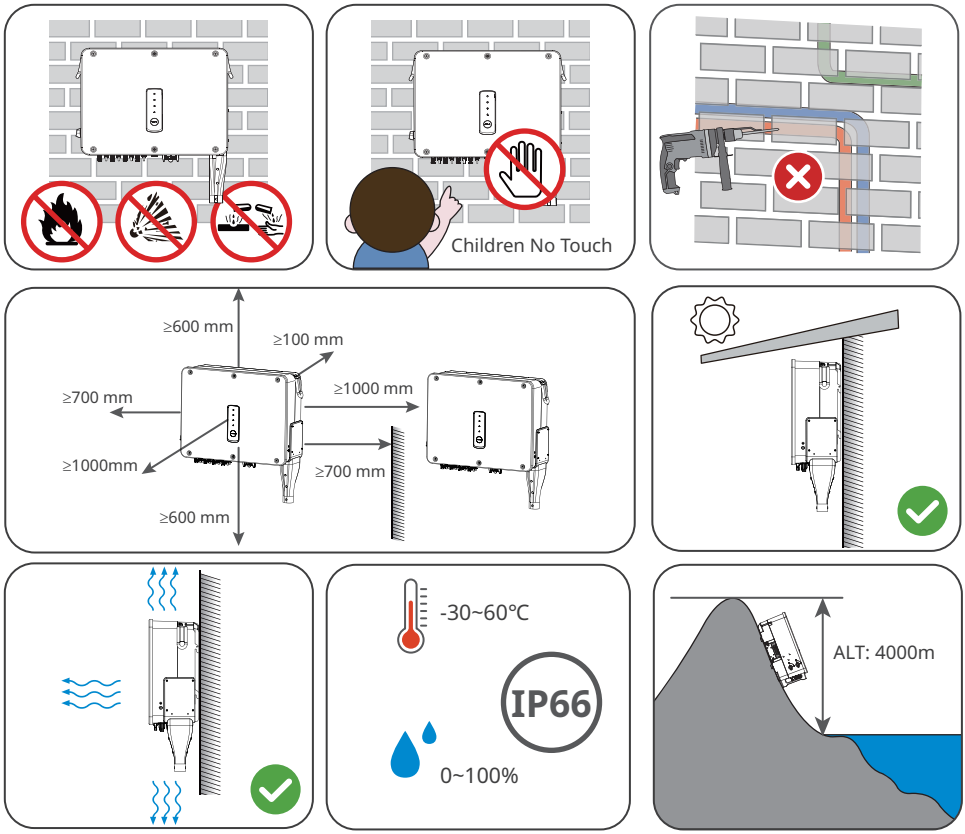

Mounting Support Requirements

- The mounting support shall be nonflammable and fireproof.
- Make sure that the support surface is solid enough to bear the product weight load.

Installation Angle Requirements

- Install the inverter vertically, with at maximum possible back tilt of 15 degrees.
- Do not install the inverter upside down, forward tilt, back forward tilt, or horizontally.

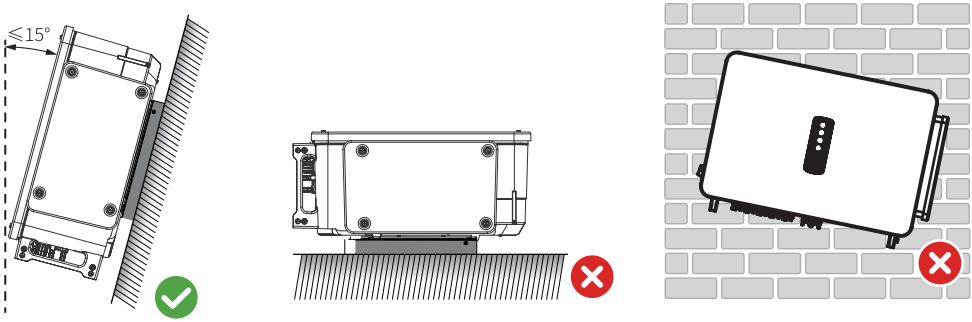

Installation Tool Requirements

The following tools are recommended when installing the equipment. Use other auxiliary tools on site if necessary.

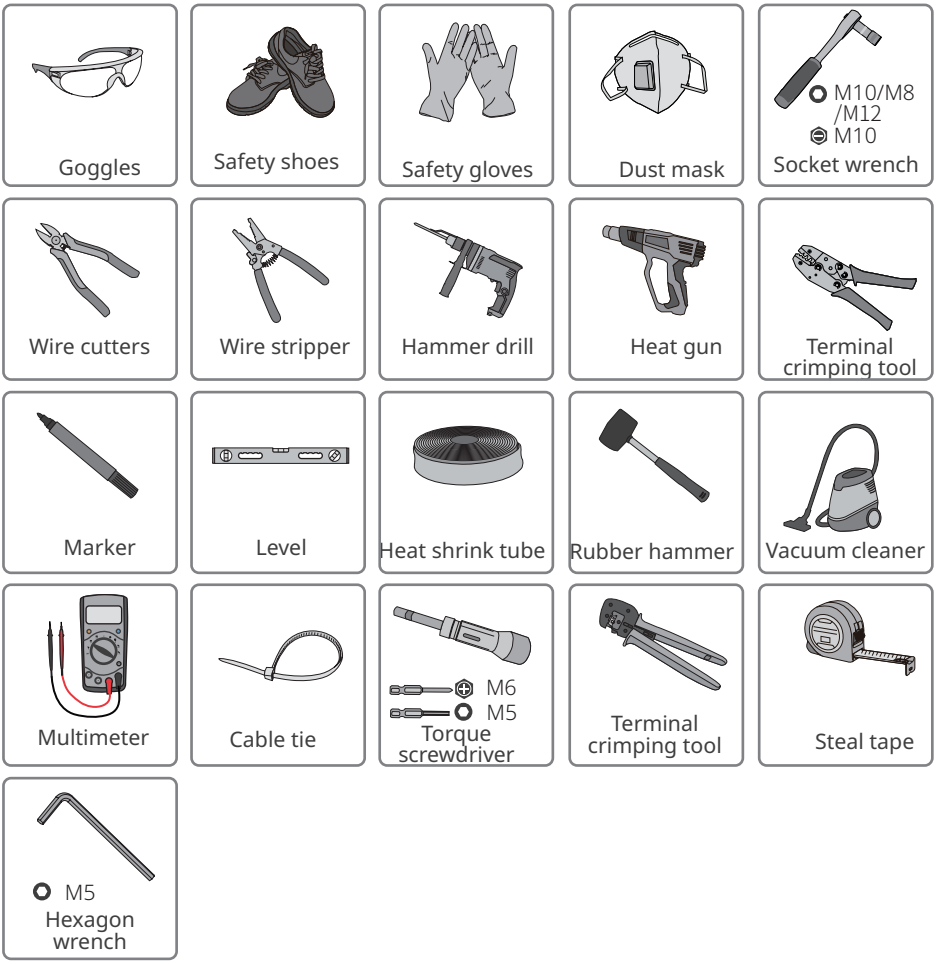

5.2 Inverter Installation

5.2.1 Moving the Inverter

⚠ CAUTION

Move the inverter to the site before installation. Follow the instructions below to avoid personal injury or equipment damage.

1. Consider the weight of the equipment before moving it. Assign enough personnel to move the equipment to avoid personal injury.
2. Wear safety gloves to avoid personal injury.
3. Keep balance when moving the equipment.

5.2.2 Installing the Inverter

NOTICE

- Avoid the water pipes and cables buried in the wall when drilling holes.
- Wear goggles and a dust mask to prevent the dust from being inhaled or contacting eyes when drilling holes.

Step 1 Mark positions for drilling holes.
Step 2 Drill holes to a depth of 65mm using the hammer drill. The diameter of the drill bit should be 13mm.
Step 3 Fix the mounting plate on the wall or the bracket.
Step 4: Grab the handles to lift the inverter, or hoist the inverter, and place it onto the mounting plate.
Step 5 : Secure the mounting plate and the inverter.

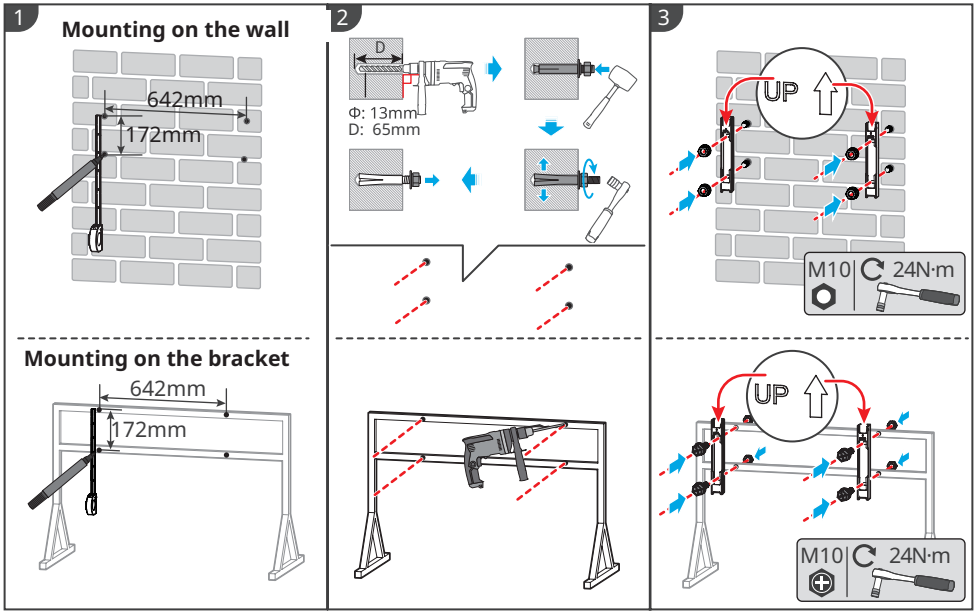

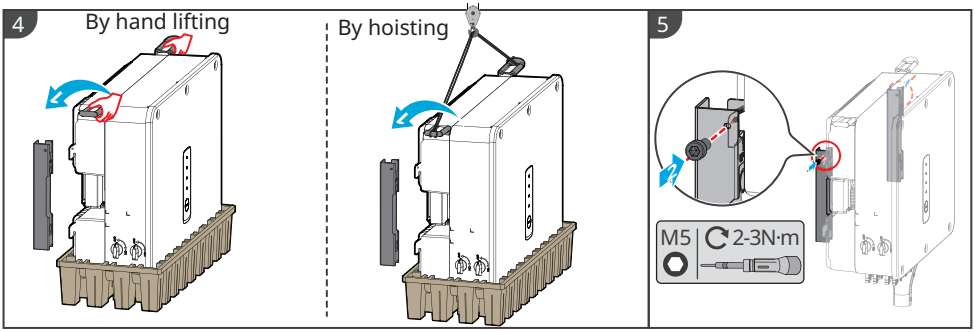

6 Electrical Connection

6.1 Safety Precautions

DANGER

- Make sure the DC switch is in the OFF position, and the AC output cable is disconnected before any electrical work. Do not work with the power on.
- Perform electrical connections in compliance with local laws and regulations. Including operations, cables, and component specifications.
- Leave enough cable slack to make sure there is no tension on the cables when connected to the corresponding terminal.

NOTICE

- Wear personal protective equipment like safety shoes, safety gloves, and insulating gloves during electrical connections.
- All electrical connections should be performed by qualified professionals.
- Cable colors in this document are for reference only. The cable specifications should meet local laws and regulations.

Cable Requirement

No.	Cable	Type	Cable Specification	
			Outer Diameter (mm)	Cross-sectional Area (mm^2)
1	PE cable	Copper Outdoors cable	11 - 23	$S_{PE} \geq S/2$*1
2	AC output cable (multi-core)	Multi-core outdoor cable	28 - 53	• Copper core : 35 ~ 150 • Aluminum alloy cable or copper-clad aluminum cable : 50 ~ 150 • PE: $S_{PE} \geq S/2$*1
3	AC output cable (single core)	Single-core outdoor cable	13 - 23	• Copper core : 35 ~ 150 • Aluminum alloy cable or copper-clad aluminum cable : 50 ~ 150 • PE: $S_{PE} \geq S/2$*1
4	DC input cable	PV cable that meets 1100V standard.	5.9 - 8.8	4 - 6
5	RS485 communication cable	Outdoor shielded twisted pair. The cable should meet local requirements.*2	4.5 - 6	0.2 - 0.5

Note:
*1: S_{PE} refers to the cross-sectional area of the protective earth conductor, and S refers to the cross-sectional area of the AC cable conductor.
*2: The total length of the communication cable shall not exceed 1000m.

The values in this table are valid only if the external protective earth conductor is made of the same metal as the phase conductor. Otherwise, the cross-sectional area of the external protective earthing conductor shall be such that its conductivity is equivalent to that specified in this table.

6.2 Connecting the PE Cable

WARNING

- The PE cable connected to the enclosure of the inverter cannot replace the PE cable connected to the AC output port. Both PE cables must be securely connected.
- Make sure that all the grounding points on the enclosures are equipotential connected when there are multiple inverters.
- To improve the corrosion resistance of the terminal, it is recommended to apply silica gel or paint on the ground terminal after installing the PE cable.
- Other sizes of grounding cables that meet local standards and safety regulations can also be used for grounding connections. But GOODWE shall not be held liable for any damage caused.

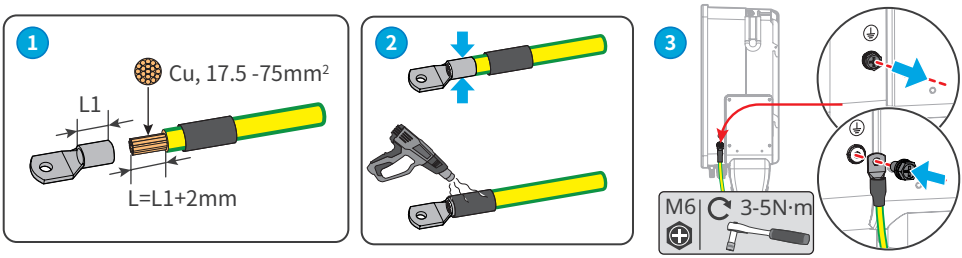

6.3 Connecting the AC Output Cable

WARNING

- Do not connect loads between the inverter and the AC switch directly connected to it.
- The Residual Current Monitoring Unit (RCMU) is integrated into the inverter. The inverter will disconnect from the utility grid rapidly once it detects any leak current over the permissible range.

Select and install RCD (Residual Current Monitoring Device) depending on local laws and regulations. Type A RCDs can be connected to the outside of the inverter for protection when the DC component of the leakage current exceeds the limit value. The following RCDs are for reference:

Inverter model	Recommended RCD specifications
GW50K-SMT-L-G10 , GW75K-SMT	≥750mA
GW80K-SMT	≥800mA

An AC circuit breaker should be installed on the AC side to make sure that the inverter can safety disconnect the grid when an exception happens. Select the appropriate AC circuit breaker in compliance with local laws and regulations. Recommended AC circuit breakers:

Inverter model	AC circuit breaker
GW75K-SMT	143A
GW50K-SMT-L-G10 , GW80K-SMT	160A

NOTICE

Install one AC circuit breaker for each inverter. Multiple inverters cannot share one AC circuit breaker.

WARNING

- Make sure to connect the AC cable wires to the corresponding terminals on the inverter to avoid any damage to the equipment
- Make sure that the whole stripped length of the wire is inserted into the terminal hole. No part of the wire core should be visible.
- Make sure that the cables are connected securely. Otherwise, the terminal may be too hot to damage the inverter when the inverter is working.
- The AC terminals are compatible with three-phase four-wire or three-phase five-wire grid. The actual wiring method may be different. The figure below takes the three-phase five-wire as an example.
- Keep extra slack for the PE wire. Make sure that would be the last one to bear stress when the AC output cable is under tension.
- Please prepare OT terminals for AC cable connection. Use copper to aluminium adapter terminals when using an aluminium cable.

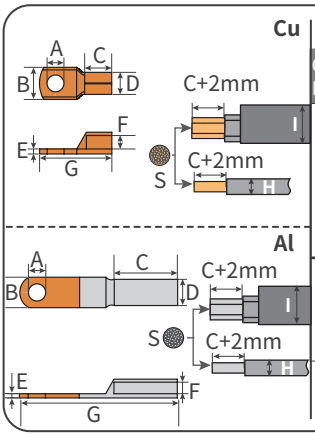

Cable Material	Cable Type	A (mm)	B (mm)	C (mm)	D (mm)	E (mm)	F (mm)	G (mm)	H (mm)	I (mm)	S (mm²)
Cu	L1|L2|L3	12.5 - 13	16 - 32	-	12 - 22	3 - 5.5	8.5 - 16	⩽103	single-core cable Φ 13 - 23	multi-core cable Φ 28 - 53	35 - 150
	N	8.5 - 9	14 - 25	-	10 - 18	3 - 4.5	7 - 13	⩽87			16 - 70
	PE	6.5 - 7									
Al	L1|L2|L3	12.5 - 13	20 - 34	-	14 - 25	3.5 - 6	8.5 - 16	⩽126	single-core cable Φ 13 - 23	multi-core cable Φ 28 - 53	50 - 150
	N	8.5 - 9	18 - 28	-	12 - 21	3.5 - 5	7 - 13	⩽112			25 - 75

Step 1: Crimp the AC cable OT terminal, and prepare the AC output cable.

Step 2: Remove the AC terminal cover.

Step 3: Fasten the AC output cable to the inverter.

Step 4: Tighten the AC terminal cover, and fasten the plastic cover.

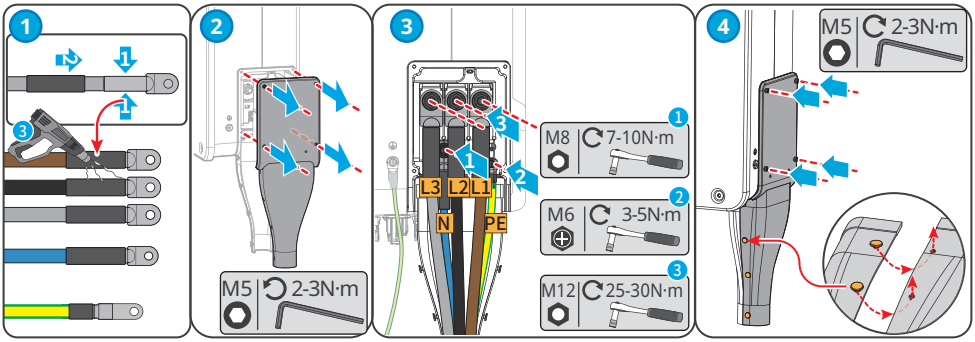

6.4 Connecting the PV Input Cable

DANGER

- Do not connect the same PV string to multiple inverters, as this may cause damage to the inverter.
- Confirm the following information before connecting the PV string to the inverter. Otherwise, the inverter may be damaged permanently or even cause fire and cause personal and property losses. Above damage or injuries are not covered by the warranty.
  - Make sure that the positive pole of the PV string connects to the PV+ of the inverter. And the negative pole of the PV string connects to the PV- of the inverter.
  - For the models of GW75K-SMT, GW80K-SMT, the open circuit voltage of the PV string connected to each MPPT shall not exceed 1100V. When the input voltage is between 1000V and 1100V, the inverter enters the waiting mode. When the voltage returns to 180V-1000V, the inverter will resume normal operation.
  - For the models of GW50K-SMT-L-G10, the open circuit voltage of the PV string connected to each MPPT shall not exceed 900V.

WARNING

- Make sure that the PV strings connected to the same MPPT should contain the same number of identical PV modules.
- To maximize the power generation of the inverter, please ensure that the Vmp of the PV modules connected in series is within the MPPT Voltage Range at Nominal Power of the inverter; as shown in the **Technical Parameters**.
- The voltage difference between two MPPTs shall be less than150V.
- Make sure that the input current of each MPPT does not exceed the Max. Input Current per MPPT, as shown in the **Technical Parameters.**
- When there are multiple PV strings, please connect them to as much inverter MPPTs as possible.

●: Connect 1 PV string ●● : Connect 2 PV strings

Quantity of PV Strings	MPPT1	MPPT2	MPPT3	MPPT4	MPPT5	MPPT6
4	●	●	●	●	-	-
5	●	●	●	●	●	-
6	●	●	●	●	●	●
7	●	●●	●	●	●	●
8	●	●●	●	●●	●	●
9	●	●●	●	●●	●	●●
10	●●	●●	●	●●	●	●●
11	●●	●●	●●	●●	●	●●

Connecting the DC Input Cable

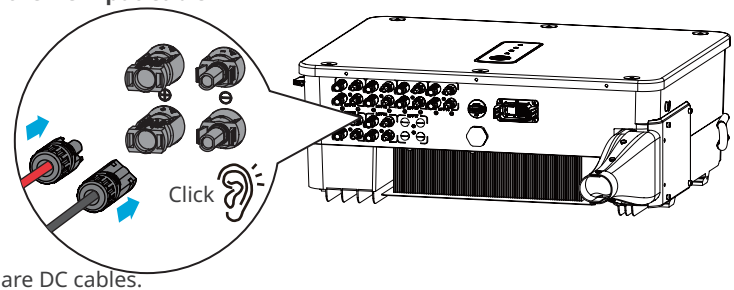

Step 1 Prepare DC cables.
Step 2 Crimp the DC cable and assemble the PV connectors.
Step 3 Fasten the PV connector.
Step 4 Measure the DC input voltage.
Step 5 Plug the PV connectors into the DC input terminals.

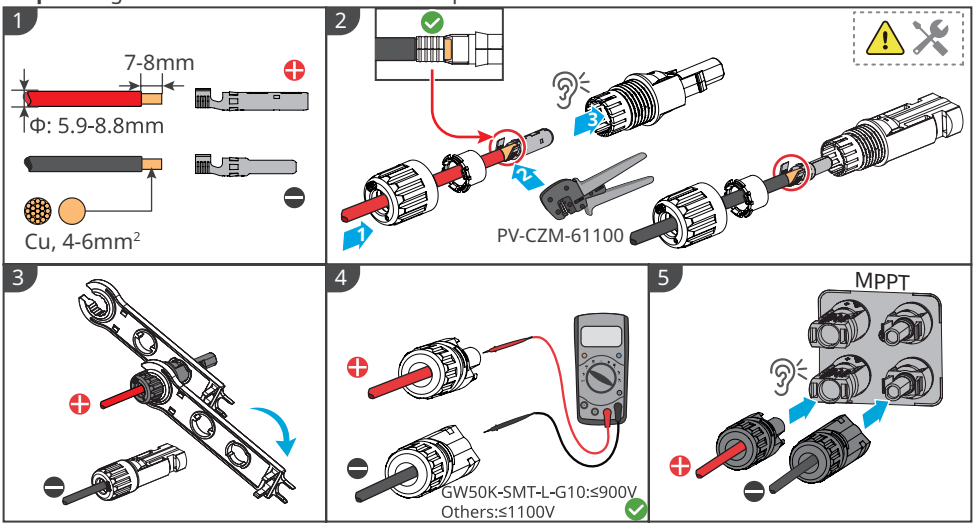

6.5 Communication

6.5.1 RS485 Communication Networking

NOTICE

- If multiple inverters are connected to the EzLogger3000C for networking, the maximum number of inverters per COM port of the EzLogger3000C is 20, and the total length of the connecting cable should not exceed 1000m.
- It is recommended to use the communication cable with shielding layer, and make it grounded during wiring.
- For multiple inverters paralleling, please connect the provided terminal resistance to the last inverter to ensure normal communication.

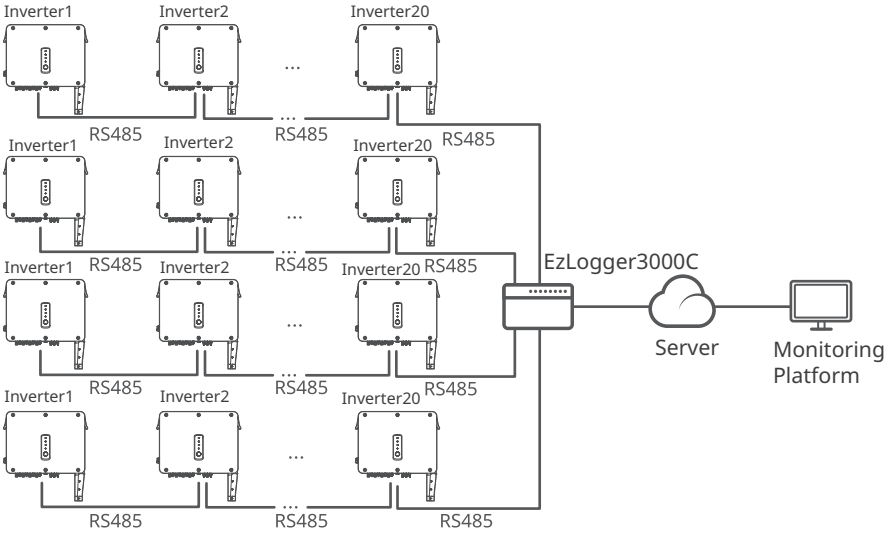

6.5.2 Power Export Limit

When all loads in the PV system cannot consume the generated electricity, the surplus power will be fed into the grid. In this case, it is possible to monitor the power generation with an smart meter, EzLogger3000C to control the amount of power fed into the grid.

WARNING

1. Install the CT near the grid connection point, and before all the loads. Make sure the arrow on the CT points towards the grid. If the arrow points towards the loads, the Power Export Limit function will not work properly and will trigger an alarm at the inverter.
2. The CT bore diameter shall be bigger than the outer diameter of AC power cable, to ensure the AC power cable can be inserted into CT.
3. For specific CT wirings, please refer to the documents provided by the respective manufacturer, to ensure that the wiring direction is correct and CT is able to work properly.
4. Only install CT on the phase (L1, L2, L3) wires, and not on the neutral (N) wire.
5. Specification of CT:
   - Choose nA/5A for the current transformation ratio of the CT. (nA: For primary current of the CT, n ranges from 200 to 5000.Set the current value depending on the actual needs.5A: The output current of the secondary current of the CT.)
   - The recommended precision of the CT: 0.5, 0.5s, 0.2, 0.2s. Ensure the sampling error for the CT current shall be ≤ 1%.
6. To ensure the current detection accuracy of the CT, it is recommended that the length of the CT cable should not exceed 30 m and the recommended current carrying ability of the cable is 6 A .

NOTICE

1. Recommended cross-sectional area of the smart meter input power cable: 1mm²(18AWG).
2. For the three-phase three-wire grid system, short circuit the N and L2 on the smart meter side and the L2 line of the grid need no CT connected.
3. Set the CT 's turns ratio via SolarGo App. For example, set the CT ratio to 40 if a 200A/5A CT is selected.
4. Scan the QR code below to get more information.

SolarGo App
User Manual

Power export limit of single inveter with GM330

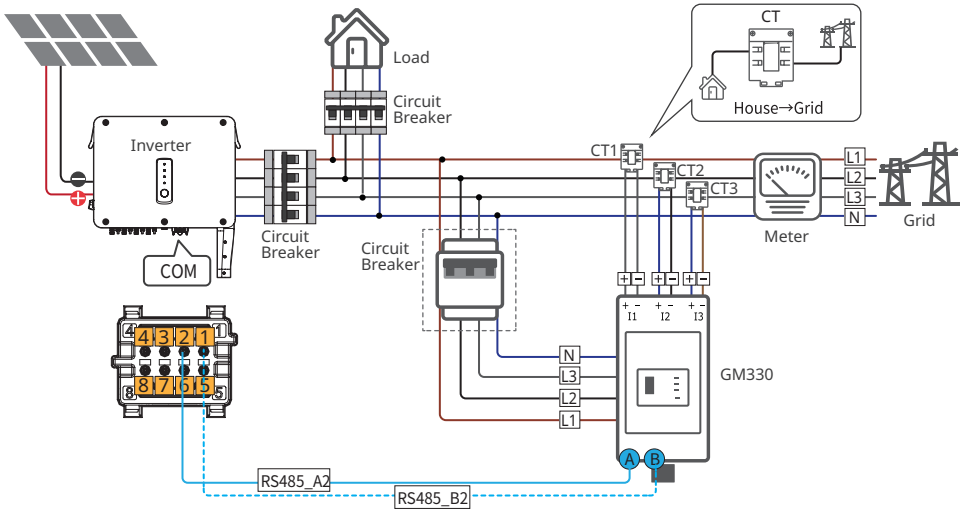

Power export limit of multi inveters with EzLogger 3000C+GM330

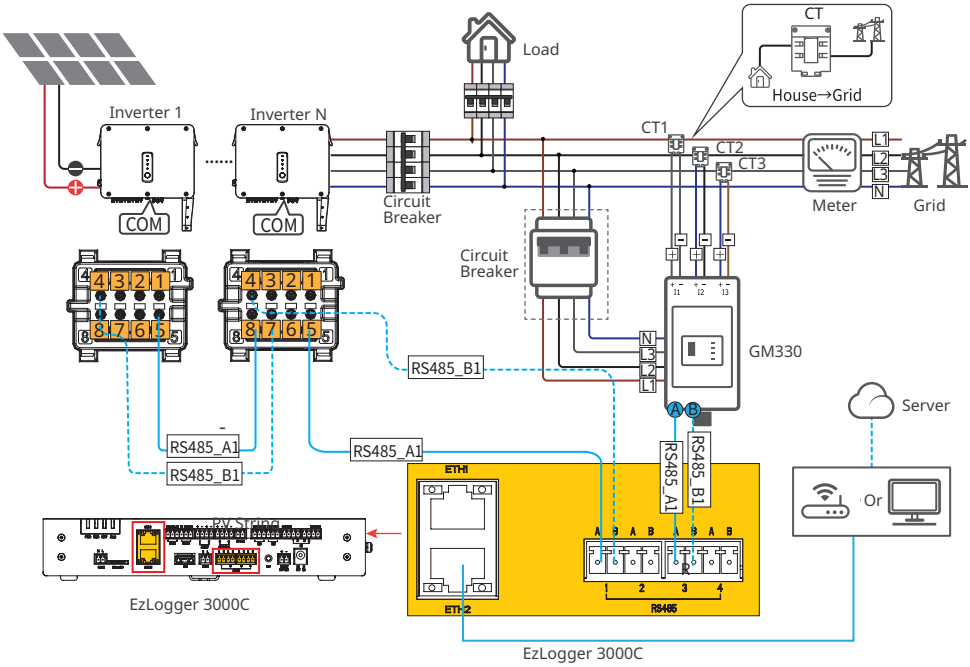

6.5.3 Connecting the Communication Cable

NOTICE

- The communication port can be configured differently according to the regulatory requirements in different regions.
- The remote shutdown, emergency poweroff, RCR function is diabled in default. Enable it via SolarGo App if needed. Detailed steps, refer to **SolarGo App User Manual**.
- When connecting the communication cable, make sure that the wiring port definition and the equipment are fully matched, and the cable alignment path should avoid interference sources, power cables, etc., so as not to affect signal reception.
- There are three wire holes in the communication terminal, corresponding to three plugs. As needed, remove the corresponding number of plugs. The unused wire holes must be plugged, to avoid affecting the protection performance of the inverter.
- Below are different configurations for certain regions.

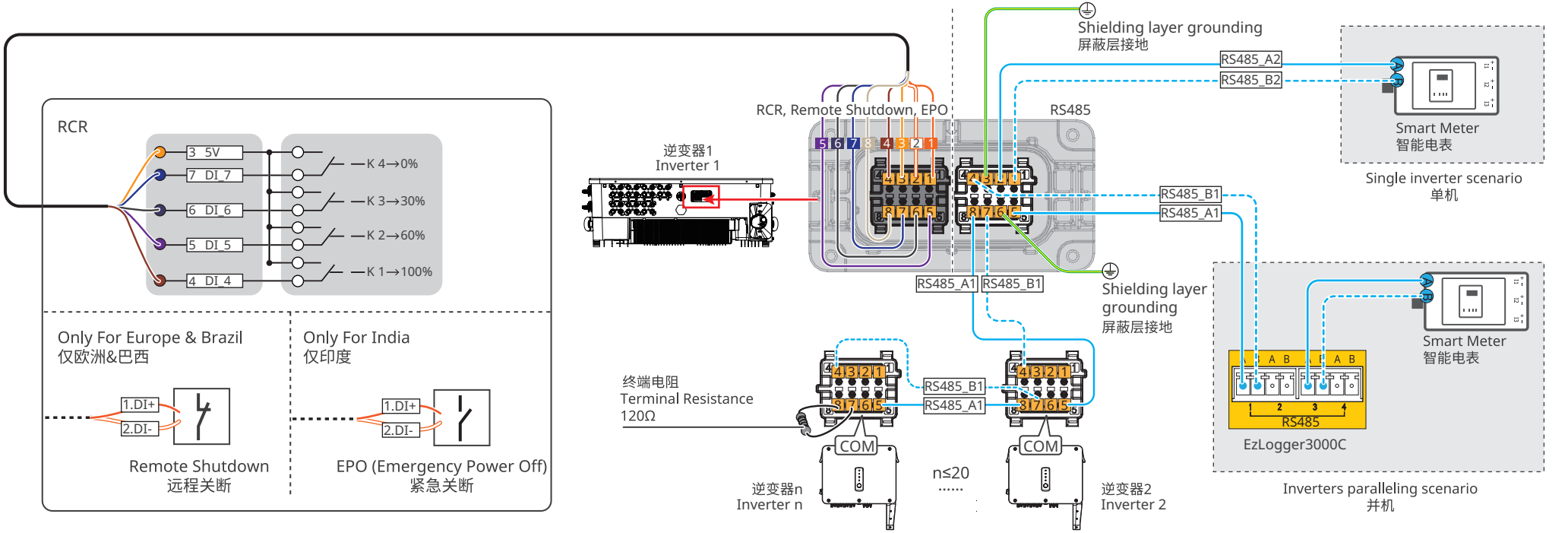

Function	No.	Definition	Description
RS485	1	RS485_B2	To connect with a smart meter.
	2	RS485_A2	
	3	Ground	To connect with multi inverters, the smart DataLogger (Ezlogger 3000C) or terminal resistance.
	4	RS485_B1	
	5	RS485_A1	
	6	Ground	
	7	RS485_B1	
	8	RS485_A1	
Remote Shutdown/ EPO (Emergency Poweroff)	1	DI1+	• To connect with Remote Shutdown device (for European models only). • To connect with EPO device (for Indian models only).
	2	DI1-	
Dry Contact	3	DO+	Reserved
	4	DO-	
RCR	3	5V	To connect RCR device. (For European models only)
	4	DI_4 (K1)	
	5	DI_5 (K2)	
	6	DI_6 (K3)	
	7	DI_7 (K4)	

Step 1: Prepare the communication cable.

Step 2: Lead the communication cable through the communication connector in sequence, insert communication wires to the communication terminal, and assemble the communication terminal into the communication connecter.

Step 3: Connect the communication connector into the communication port on the inverter.

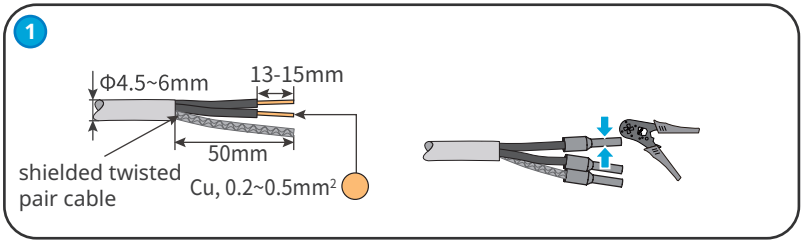

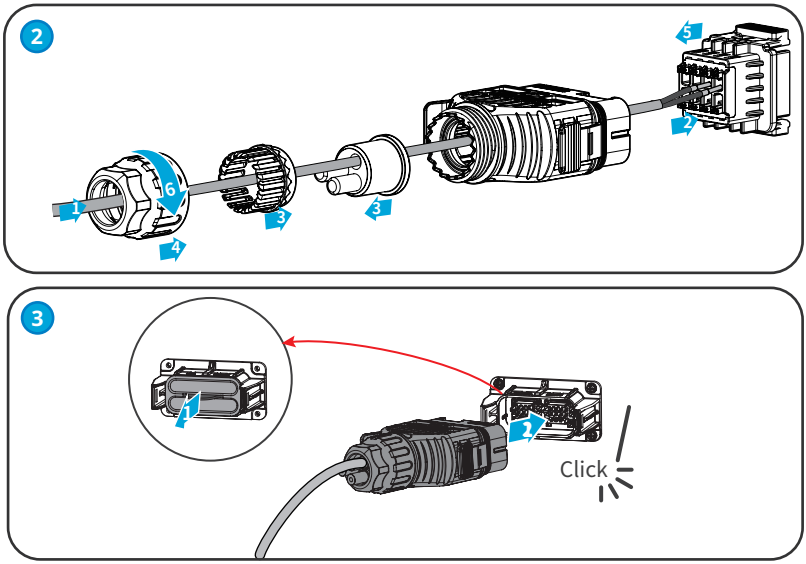

6.5.4 Installing the Smart Dongle

Plug a smart dongle into the inverter to establish a connection between the inverter and the smartphone or web pages. The smart dongle can be a 4G , WiFi, bluetooth or WiFi+LAN module. Set inverter parameters, check running information and fault information, and observe system status in time via the smartphone or web pages.

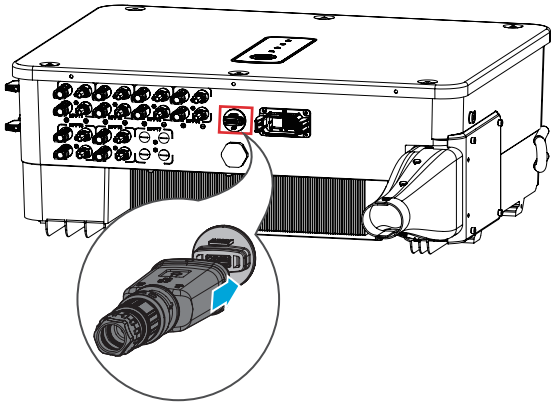

NOTICE
Refer to the smart dongle user manual to get more introduction to the module. For more detailed information, visit https://en.goodwe.com/.

7 Equipment Commissioning

7.1 Checks before Power On

No.	Check Item
1	The inverter is firmly installed in a clean place where is well-ventilated and easy to operate.
2	The PE cable, DC input cable, AC output cable, and communication cable are connected correctly and securely.
3	Cable ties are routed properly and evenly, and no burrs.
4	Unused ports and terminals are sealed.
5	The voltage and frequency at the connection point meet the on-grid requirements.

7.2 Power On

Step 1 Turn on the AC breaker between the inverter and the utility grid.
Step 2 Turn on the DC breaker of the inverter.

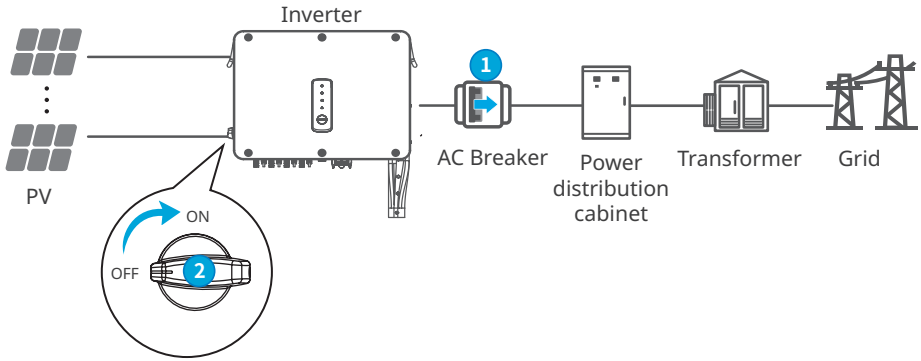

8 System Commissioning

8.1 Indicators and Button

Indicator	Status	Description
		ON = EQUIPMENT POWER ON
		OFF = EQUIPMENT POWER OFF
		ON = THE INVERTER IS FEEDING POWER
		OFF = THE INVERTER IS NOT FEEDING POWER
		SINGLE SLOW FLASH = SELF CHECK BEFORE CONNECTING TO THE GRID
		SINGLE FLASH = CONNECTING TO THE GRID
		ON = WIRELESS IS CONNECTED/ACTIVE
		BLINK 1 = WIRELESS SYSTEM IS RESETTING
		BLINK 2 = WIRELESS ROUTER NOT CONNECTED
		BLINK 4 = WIRELESS SERVER PROBLEM
		BLINK = RS485 IS CONNECTED
		OFF = WIRELESS IS NOT ACTIVE
		ON = A FAULT HAS OCCURRED
		OFF = NO FAULT

8.2 Setting Inverter Parameters via LCD

NOTICE

- The screen shots are for reference only. The actual display may differ.
- The name, range, and default value of the parameters is subject to change or adjust. The actual display prevails.
- To prevent the generating capacity from being influenced by wrong parameters, the power parameters should be set by professionals.

LCD Button Description

- Stop pressing the button for a period on any page, the LCD will get dark and go back to the initial page.
- Short press the button to switch menu or adjust parameter values.
- Long press the button to enter the submenu. After adjusting the parameter values, long press to save it.

Examples:

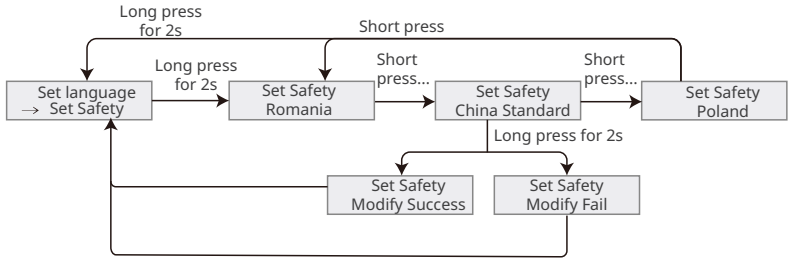

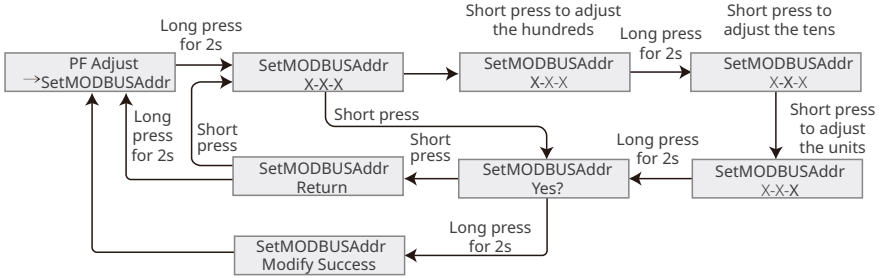

8.2.1 LCD Menu Introduction

This part describes the menu structure, allowing you view inverter information and set parameters more conveniently.

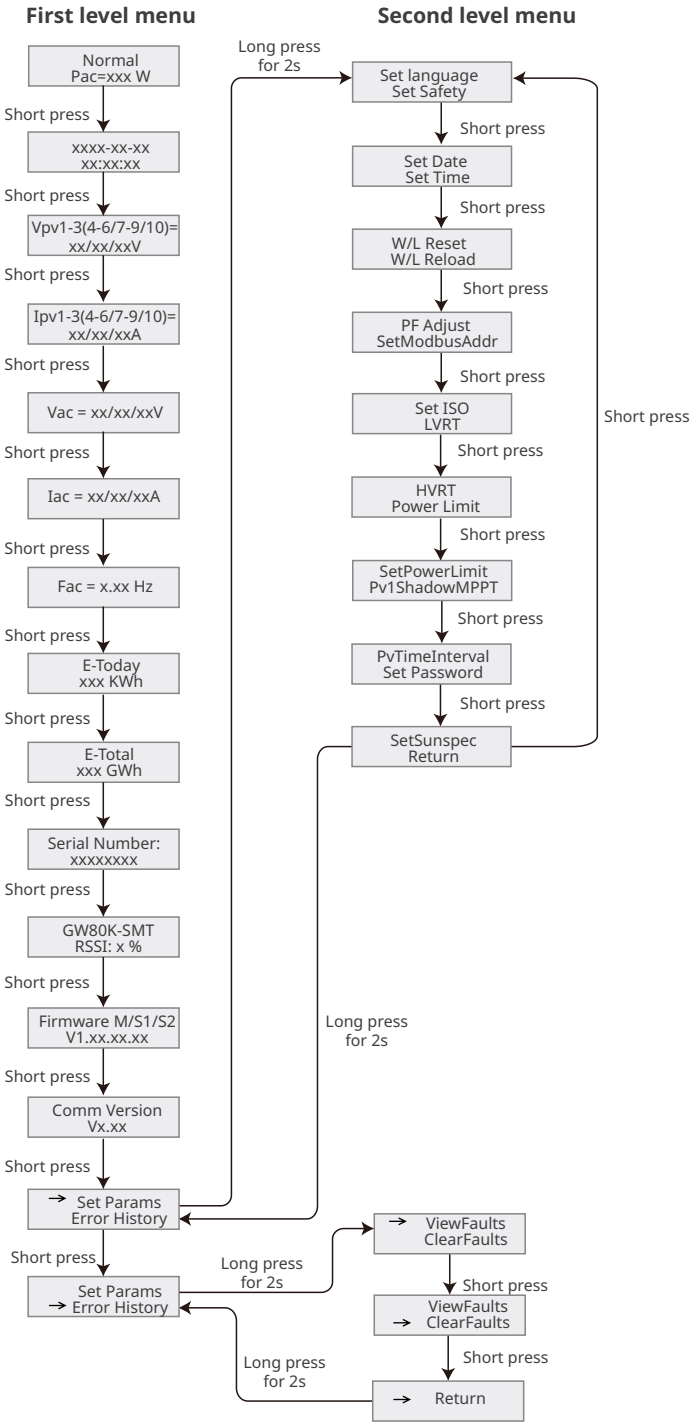
First level menu
Second level menu
Normal
Pac=xxx W
Short press
xxxx-xx-xx
xx:xx:xx
Short press
Vpv1-3(4-6/7-9/10)=
xx/xx/xxV
Short press
Ipv1-3(4-6/7-9/10)=
xx/xx/xxA
Short press
Vac = xx/xx/xxV
Short press
Iac = xx/xx/xxA
Short press
Fac = x.xx Hz
Short press
E-Today
xxx KWh
Short press
E-Total
xxx GWh
Short press
Serial Number:
xxxxxxxx
Short press
GW80K-SMT
RSSI: x %
Short press
Firmware M/S1/S2
V1.xx.xx.xx
Short press
Comm Version
Vx.xx
Short press
→ Set Params
Error History
Short press
Set Params
→ Error History
Long press
for 2s
Set language
Set Safety
Short press
Set Date
Set Time
Short press
W/L Reset
W/L Reload
Short press
PF Adjust
SetModbusAddr
Short press
Set ISO
LVRT
Short press
HVRT
Power Limit
Short press
SetPowerLimit
Pv1ShadowMPPT
Short press
PvTimeInterval
Set Password
Short press
SetSunspec
Return
Short press
Long press
for 2s
Long press
for 2s
→ ViewFaults
ClearFaults
Short press
ViewFaults
→ ClearFaults
Short press
→ Return
Long press
for 2s

8.2.2 Inverter Parameter Introduction

Parameters	Description
Normal pac=xxxW	Home page. Indicates the real-time power of the inverter.
2022-02-14 09:01:10	Check the time of the country/region.
VPv1	Check the DC input voltage of the inverter.
IPv1	Check the DC input current of the inverter.
Vac	Check the voltage of the utility grid.
Iac	Check the AC output current of the inverter.
Fac	Check the frequency of the utility grid.
E-Today	Check the generated power of the inverter for that day.
E-Total	Check the total generated power of the inverter.
Serial Number	Check the serial number of the inverter.
GW80K-SMT RSSI%	Check the signal strength of the smart dongle.
Firmware M/S1/S2	Check the firmware version.
Comm Version	Check the Comm version.
Set Safety	Set the safety country/region in compliance with the local grid standards and application scenario of the inverter.
Set Date	Set time according to the actual time in the country/region where the inverter is located.
Set Time	
Set Password	The password can be changed. Keep the changed password in mind after changing it. Contact the after-sales service if you forget the password.
W/L Reset	Power off and restart the smart dongle.
W/L Reload	Restore the factory settings of the smart dongle. Reconfigure the smart dongle network parameters after restoring the factory settings,
PF Adjust	Set the power factor of the inverter according to the actual situation.
SetModbusAddr	Set the actual Modbus address.
Set ISO	Indicates the PV-PE insulation resistance threshold value. When the detected value is under the set value, the IOS fault occurs.

Parameters	Description
LVRT	With LVRT on, the inverter will stay connected with the utility grid after a short-term utility grid low voltage exception occurs.
HVRT	With HVRT on, the inverter will stay connected with the utility grid after a short-term utility grid high voltage exception occurs.
Power Limit	Set the power feed back into the utility grid according to the actual situation.
SetPowerLimit	
ShadowMPPT	Enable the shadow scan function if the PV panels are shadowed.
PvTimeInterval	Set the scan time according to the actual needs.
SetSunspec	Set the Sunspec based on the actual communication method.
ViewFaults	Check historical fault records of the inverter.
ClearFaults	Clear historical fault records of the inverter.

8.3 Setting Inverter Parameters via App

SolarGo is an application used to communicate with the inverter via Bluetooth module, WiFi module, Wi-Fi/LAN module, or 4G module. Commonly used functions:

1. Check the operating data, software version, alarms of the inverter, etc.
2. Set grid parameters and communication parameters of the inverter.
3. Maintain the equipment.

For more details, refer to the SolarGo APP User Manual. Scan the QR code or visit https://en.goodwe.com/Ftp/EN/Downloads/User%20Manual/GW_SolarGo_User%20Manual-EN.pdf to get the user manual.

SolarGo App

SolarGo App User Manual

8.4 Monitoring via SEMS Portal

SEMS Portal is an monitoring platform used to manage organizations/users, add plants, and monitor plant status.
For more details, refer to the SEMS Portal User Manual. Scan the QR code or visit https://en.goodwe.com/Ftp/EN/Downloads/User%20Manual/GW_SEMS%20Portal-User%20Manual-EN.pdf to get the user manual.

SEMS Portal

SEMS Portal User Manual

9 Maintenance

9.1 Power Off the Inverter

DANGER

- Power off the inverter before operations and maintenance. Otherwise, the inverter may be damaged or electric shocks may occur.
- Delayed discharge. Wait until the components are discharged after power off.

Step 1 (Recommended) send a command to the inverter for halting the grid connecting via SolarGo App
Step 2 Turn off the AC switch between the inverter and the utility grid.
Step 3 Turn off the DC switch of the inverter.

9.2 Removing the Inverter

WARNING

- Make sure that the inverter is powered off.
- Wear proper PPE before any operations.

Step 1 Disconnect all the cables, including DC cables, AC cables, communication cables, the smart dongle, and PE cables.
Step 2 Handle or hoist the inverter to take it down from the wall or the bracket.
Step 3 Remove the bracket.
Step 4 Store the inverter properly. If the inverter needs to be used later, ensure that the storage conditions meet the requirements.

9.3 Disposing of the Inverter

If the inverter cannot work any more, dispose of it according to the local disposal requirements for electrical equipment waste. Do not dispose of it as household waste.

9.4 Troubleshooting

Perform troubleshooting according to the following methods. Contact the after-sales service if these methods do not work.
Collect the information below before contacting the after-sales service, so tha the problems can be solved quickly.

1. Inverter information like serial number, software version, installation date, fault time, fault frequency, etc.
2. Installation environment, including weather conditions, whether the PV modules are sheltered or shadowed, etc. It is recommended to provide some photos and videos to assist in analyzing the problem.
3. Utility grid situation.

No.	Fault	Cause	Solutions
1	Utility Loss	1. Utility grid power failure. 2. The AC circuit or the AC breaker is disconnected.	1. The alarm will be automatically cleared after the grid power supply restores. 2. Check whether the AC cable is connected and the AC breaker is on.
2	Grid Overvoltage	The grid voltage exceeds the allowed range, or the duration exceeds the set value of HVRT duration.	1. i.If it only occurs occasionally, it may be caused by a short term grid abnormality. The inverter will recover automatically after the grid is back to normal operation. 2. If it occurs frequently, please check whether the grid voltage is within the allowed range. • If the grid voltage exceeds the allowed range, please contact local power operator. • If the grid voltage is within the allowable range, please modify the inverter grid overvoltage protection value with the consent of the local power operator. 3. If it does not recover for a long time, please check whether the AC side circuit breaker or output cables are connected properly.
3	Grid Rapid Overvoltage	The grid voltage is abnormal or the ultra-high voltage triggers the fault.	

No.	Fault	Cause	Solutions
4	Grid Undervoltage	The grid voltage is lower than the allowed range, or the duration exceeds the setted value of LVRT duration.	1. If occurs occasionaly, it may be caused a short term grid abnormity. The inverter will recover automatically after the grid is back to normal operation. 2. If it occurs frequently, please check whether the grid voltage is within the allowed range. • If the grid voltage exceeds the allowed range, please contact local power operator. • If the grid voltage is within the allowable range, please modify the inverter grid undervoltage protection value with the consent of the local power operator. 3. If it does not recover for a long time, please check whether the AC side circuit breaker or output cables are connected properly.
5	Grid 10min Overvoltage	The average value of the grid voltage within 10 minutes exceeds the range specified by safety regulations.	1. If occurs occasionaly, it may be caused a short term grid abnormity. The inverter will recover automatically after the grid is back to normal operation. 2. If it occurs frequently, please check whether the grid voltage is within the allowed range. • If the grid voltage exceeds the allowed range, please contact local power operator. • If the grid voltage is within the allowable range, please modify the Grid 10min Overvoltage protection value with the consent of the local power operator.
6	Grid Overfrequency	The frequency of the grid exceeds the local grid standard range.	1. If occurs occasionaly, it may be caused a short term grid abnormity. The inverter will recover automatically after the grid is back to normal operation. 2. If it occurs frequently, please check whether the grid voltage is within the allowed range. • If the grid voltage exceeds the allowed range, please contact local power operator. • If the grid voltage is within the allowable range, please modify the Grid Overfrequency protection value with the consent of the local power operator.

No.	Fault	Cause	Solutions
7	Grid Underfrequency	The frequency of the grid is below the local grid standard range.	1. If occurs occasionaly, it may be caused a short term grid abnormity. The inverter will recover automatically after the grid is back to normal operation. 2. If it occurs frequently, please check whether the grid voltage is within the allowed range. • If the grid voltage exceeds the allowed range, please contact local power operator. • If the grid voltage is within the allowable range, please modify the Grid Underfrequency protection value with the consent of the local power operator.
8	Anti-islanding	The grid has been disconnected. The grid voltage is maintained due to the presence of loads. Grid connection has been stopped based on safety regulations and protection requirements.	The inverter will resume grid reconnection after the grid to return to normal.

No.	Fault	Cause	Solutions
9	LVRT Undervoltage	Abnormal grid, and the abnormal duratin exceeds the specified value of local high voltage safety regulation.	1. If occurs occasionaly, it may be caused a short term grid abnormity. The inverter will recover automatically after the grid is back to normal operation. 2. If it occurs frequently, please check whether the grid voltage is within the allowed range. • If no, please contact local power operator. • If yes, please contact the local service center.
10	HVRT Overvoltage	Abnormal grid, and the abnormal duratin exceeds the specified value of local high voltage safety regulation.	
11	Abnormal GFCI 30mA	The insulation impedance pf PV string to ground decreases during the operation of the inverter.	1. If occurs occasionaly, it may be caused a occasional abnormal ouside wiring. The inverter will recover automatically after clear the abnormity. 2. If it occurs frequently or cannot restore for a long time, please check if the insulation impedance of the PV string to the ground is too low.
12	Abnormal GFCI 60mA		
13	Abnormal GFCI 150mA		
14	Abnormal GFCI		
15	Large DC of AC current L1	The DC component of the inverter output current exceeds the local safety regulation's or the inverter's default allowable range.	1. If caused by an external fault (such as the grid abnormality, frequency abnormality, etc.), the inverter will resume normal operation automatically after the fault is cleared. 2. If the alarm occurs frequently or affects the normal power generation, please contact your dealer or after-sales service center.
16	Large DC of AC current L2		
17	Low Insulation Res.	1. The short circuit protection of PV to the ground. 2. The installation environment of PV strings is relatively humid for a long time and the insulation of PE cable is poor.	1. Check the impedance of the PV string to the ground. If there is a short circuit phenomenom, please check the short circuit point and rectify it. 2. Check if the PE cable of the inverter is connected correctly. 3. If it is confirmed that the impedance is indeed lower than the default value in cloudy and rainy days, please reset the "insulation impedance protection value".

No.	Fault	Cause	Solutions
18	L-PE Short Circuit	The live wire connection of the inverter output terminal is abnormal	1. Check the wiring of the grid side. If the wiring is wrong, please correct it. 2. If the inverter continues to fail to return to normal, please contact after-sales service
19	Anit Reverse power Failure	Abnormal load connection	1. If caused by an external fault, the inverter will resume normal operation automatically after the fault is cleared. 2. If the alarm occurs frequently or affects the normal power generation, please contact your dealer or after-sales service center.
20	Internal Comm Loss	1. Chip has not be powered on 2. Chip program version error	Disconnect the AC side switch and DC side switch, and after 5 minutes, close the AC side switch and DC side switch. If the fault persists, please contact your dealer or after-sales service center.
21	AC HCT Check abnormal	Abnormal sampling of AC HCT	Disconnect the AC output switch and DC input switch, then connect them 5 minutes later. Contact the dealer or the after-sales service if the problem persists.
22	GFCI HCT Check abnormal	Abnormal sampling of GFCI HCT	
23	Relay Check abnormal	1. The relay is abnormal or short-circuited. 2. The control circuit is abnormal. 3. The AC cable connection is abnormal, like a virtual connection or short circuit.	
24	Internal Fan abnormal	1. The fan power supply is abnormal. 2. Mechanical exception. 3. The fan is aging and damaged.	
25	External Fan abnormal		
26	Flash Fault	Internal storage Flash exception	
27	DC Arc Fault	1. The PV string connection terminal is not securely connected. 2. The DC cable is damaged.	Please check if the DC side is correctly wored according to the guidances of the user manual.

No.	Fault	Cause	Solutions
28	AFCI Self-test Fault	Arc detection device is abnormal	Disconnect the AC output switch and DC input switch, then connect them 5 minutes later. Contact the dealer or the after-sales service if the problem persists.
29	Inv Module Overtemperature	1. The inverter is installed in a place with poor ventilation. 2. The ambient temperature exceeds 60℃. 3. A fault occurs in the internal fan of the inverter.	1. Check the ventilation and the ambient temperature at the installation point. 2. If the ventilation is poor or the ambient temperature is too high, improve the ventilation and heat dissipation. 3. Contact the dealer or after-sales service if both the ventilation and the ambient temperature are proper.
30	1.5V Ref abnormal	The reference circuit is abnormal.	Disconnect the AC output switch and DC input switch, then connect them 5 minutes later. Contact the dealer or the after-sales service if the problem persists.
31	0.3V Ref abnormal	The reference circuit is abnormal.	
32	BUS Overvoltage	1. The PV voltage is too high. 2. The sampling of the inverter BUS voltage is abnormal. 3. The isolation of the transformer of the inverter is poor, so two inverters influence each other when connected to the grid. One of the inverters reports DC Overvoltage.	
33	P-BUS Overvoltage		
34	N-BUS Overvoltage		
35	BUS Overvoltage(Slave CPU 1)		
36	P-BUS Overvoltage(Slave CPU 1)		
37	N-BUS Overvoltage(Slave CPU 1)		
38	PV Input Overvoltage	Excess PV modules are connected in the series, and the open-circuit voltage is higher than the operating voltage.	Check whether the PV string open-circuit voltage meets the maximum input voltage requirements.
39	PV Continuous Hardware Overcurrent	1. Improper PV panels configuration. 2. Internal components of the inverter are damaged.	Disconnect the AC output switch and DC input switch, then connect them 5 minutes later. Contact the dealer or the after-sales service if the problem persists.
40	PV Continuous Software Overcurrent		

No.	Fault	Cause	Solutions
41	PV String Reversed (Str1~Str16)	The PV string is connected reversely.	Check if The PV string is connected reversely.
42	PV voltage Low	Sun light is weak or changing abnormally.	1. If the problem occurs occasionally, the reason might be abnormal sun light. The inverter will recover automatically without manual intervention. 2. If the problem occurs frequently, contact the dealer or the after-sales service.
43	BUS voltage Low		
44	BUS Soft Start Failure	boost driving ciucuit is abnormal.	Disconnect the AC output switch and DC input switch, then connect them 5 minutes later. Contact the dealer or the after-sales service if the problem persists.
45	BUS Voltage Imbalance	1. Abnormal inverter sampling circuit 2. Abnormal hardware.	
46	Gird Phase Lock failure	the grid frequency is unstable.	
47	Inverter Continuous Overcurrent	Short time sudden changes in the grid or load cause the control overcurrent.	If the problem occurs occasionally, ignore it. If the problem occurs frequently, contact the dealer or the after-sales service.
48	Inv Software Overcurrent		
49	R Phase Hardware Overcurrent		
50	S Phase Hardware Overcurrent		
51	T Phase Hardware Overcurrent		

No.	Fault	Cause	Solutions
52	PV Hardware Overcurrent	Sun light is weak or changing abnormally.	Disconnect the AC output switch and DC input switch, then connect them 5 minutes later. Contact the dealer or the after-sales service if the problem persists.
53	PV Software Overcurrent		
54	PV HCT Failure	Abnormal boost current sensor	
55	Cavity Overtemperature	1. The inverter is installed in a place with poor ventilation. 2. The ambient temperature exceeds 60℃. 3. A fault occurs in the internal fan of the inverter.	1. Check the ventilation and the ambient temperature at the installation point. 2. If the ventilation is poor or the ambient temperature is too high, improve the ventilation and heat dissipation. 3. Contact the dealer or after-sales service if both the ventilation and the ambient temperature are proper.

9.5 Routine Maintenance

⚠ DANGER

Power off the inverter before operations and maintenance. Otherwise, the inverter may be damaged or electric shocks may occur.

Maintaining Item	Maintaining Method	Maintaining Period
System Clean	Check the heat sink, air intake, and air outlet for foreign matter or dust.	Once 6-12 months
Fan	Check the fan for proper working status, low noise, and intact appearance.	Once a year
DC Switch	Turn the DC switch on and off ten consecutive times to make sure that it is working properly.	Once a year
Electrical Connection	Check whether the cables are securely connected. Check whether the cables are broken, or whether there is any exposed copper core.	Once 6-12 months
Sealing	Check whether all the terminals and ports are properly sealed. Reseal the cable hole if it is not sealed or too big.	Once a year
THDi Test	For Australia requirements, in the THDi test, there should add Zref between inverter and mains. Zref: Zmax or Zref (phase current>16A) Zref: L: 0.24 Ω + j0.15 Ω; N: 0.16 Ω + j0.10 Ω (phase current>16A, <21.7A) Zref: L: 0.15 Ω + j0.15 Ω; N: 0.1 Ω + j0.1 Ω (phase current>21.7A, <75A) Zref: ≥5% Un/Irated+j5% Un/Irated (phase current>75A)	As needed

10 Technical Parameters

Technical Data	GW50K-SMT-L-G10
Input	
Max. Input Power (kW)	90
Max. Input Voltage (V)	900
MPPT Operating Voltage Range (V)	180~800
MPPT Voltage Range at Nominal Power (V)	250 ~ 650
Start-up Voltage (V)	180
Nominal DC Input Voltage (V)	370
Max. Input Current per MPPT (A)	42
Max. Short Circuit Current per MPPT (A)	52.5
Max. Backfeed Current to The Array (A)	0
Number of MPP Trackers	6
Number of Strings per MPPT	2
Output	
Nominal Output Power (kW)	50
Nominal Output Apparent Power (kVA)	50
Max. AC Active Power (kW)	50
Max. AC Apparent Power (kVA)	50
Nominal Power at 40℃ (kW)	50
Max. Power at 40℃ (Including AC Overload) (kW)	50
Nominal Output Voltage (V)	127/220, 3L/N/PE or 3L/PE
Output Voltage Range (V)	176 ~ 246
Nominal AC Grid Frequency (Hz)	50/60
Max. Output Current (A)	131.2
Max. Output Fault Current (Peak and Duration) (A)	244
Inrush Current (Peak and Duration)(A)	50A@1μs
Nominal Output Current (A)	131.2
Power Factor	~1 (Adjustable from 0.8 leading to 0.8 lagging)
Max. Total Harmonic Distortion	<3%
Maximum Output Overcurrent Protection (A)	235

Technical Data	GW50K-SMT-L-G10
Efficiency	
Max. Efficiency	98.60%
European Efficiency	98.10%
Protection	
PV String Current Monitoring	Integrated
PV Insulation Resistance Detection	Integrated
Residual Current Monitoring	Integrated
PV Reverse Polarity Protection	Integrated
Anti-islanding Protection	Integrated
AC Overcurrent Protection	Integrated
AC Short Circuit Protection	Integrated
AC Overvoltage Protection	Integrated
DC Switch	Integrated
DC Surge Protection	Type II (Type I + II Optional)
AC Surge Protection	Type II
AFCI	Optional
Rapid Shutdown	Optional
Remote Shutdown	Optional
PID Recovery	Optional
Reactive Power Compensation at Night	Optional
Power Supply at Night	Optional
I-V Curve Scan	Optional
I-V Curve Diagnosis	Optional
General Data	
Operating Temperature Range (℃)	-25 ~ 60
Storage Temperature (℃)	-40 ~ 70
Relative Humidity	0 ~ 100%
Max. Operating Altitude (m)	4000
Cooling Method	Smart Fan Cooling
User Interface	LED, LCD (Optional), APP
Communication	RS485, WiFi + LAN+Bluetooth

Technical Data	GW50K-SMT-L-G10
Communication Protocols	Modbus-RTU (SunSpec Compliant)
Weight (Kg)	64
Dimensions (WxHxD mm)	700*550*260
Noise Emission (dB)	<65
Topology	Non-isolated
Self-consumption at Night (W)	<1
Ingress Protection Rating	IP66
Anti-corrosion Class	C4 , C5 (Optional)
DC Connector	MC4 (4~6mm^2)
AC Connector	OT/DT terminal (Max. 150mm^2)
Environmental Category	4K4H
Pollution Degree	III
Overvoltage Category	DCII / ACIII
Protective Class	I
The Decisive Voltage Class (DVC)	PV:C AC:C com:A
Mounting Method	Wall Mounted
Active Anti-islanding Method	AFDPF + AQDPF
Country of Manufacture	China

Technical Data	GW80K-SMT	GW75K-SMT
Input(DC)		
Max.Input Power (kW)	120	112.5
Max.Input Voltage(V)	1100	1100
MPPT Operating Voltage Range (V)	180~1000	
MPPT Voltage Range at Nominal Power (V)	500~850	
Start-up Voltage (V)	200	
Nominal Input Voltage (V)	600	
Max. Input Current per MPPT (A)	42	
Max. Short Circuit Current per MPPT (A)	52.5	
Max.Backfeed Current to The Array(A)	0	
Number of MPP Trackers	6	6
Number of Strings per MPPT	2	
Output(AC)		
Nominal Output Power (kW)	80	75
Nominal Output Apparent Power (kVA)	80	75
Max. AC Active Power (kW)	88	75
Max. AC Apparent Power (kVA)	88	75
Nominal Power at 40℃(kW)	88	75
Max Power at 40℃ (including AC overload) (kW)	88	75
Nominal Output Voltage (V)	220/380, 230/400, 3L/N/PE or 3L/PE	380, 3L/N/PE or 3L/PE
Output Voltage Range (V)	323~457	305~426
Nominal AC Grid Frequency (Hz)	50/60	
AC Grid Frequency Range (Hz)	45~55/55~65	
Max. Output Current (A)	128.0	114.0
Max. Output Fault Current (Peak and Duration) (A)	244	
Inrush Current (Peak and Duration) (A)	50	
Nominal Output Current (A)	122.0 @380V 116.0 @400V	114.0
Power Factor	~1 (Adjustable from 0.8 leading to 0.8 lagging)	
Max. Total Harmonic Distortion	<3%	

Technical Data	GW80K-SMT	GW75K-SMT
Maximum Output Overcurrent Protection (A)	235	
Efficiency		
Max. Efficiency	98.6%	98.6%
European Efficiency	98.1%	98.1%
Protection		
PV String Current Monitoring	Integrated	
PV Insulation Resistance Detection	Integrated	
Residual Current Monitoring	Integrated	
PV Reverse Polarity Protection	Integrated	
Anti-islanding Protection	Integrated	
AC Overcurrent Protection	Integrated	
AC Short Circuit Protection	Integrated	
AC Overvoltage Protection	Integrated	
DC Switch	Integrated	
DC Surge Protection	Type II (Type I + II Optional)	
AC Surge Protection	Type II	
AFCI	Optional	Integrated
Emergency Power Off	Optional	
Rapid Shutdown	Optional	
Remote Shutdown	Optional	
PID Recovery	Optional	
Reactive Power Compensation at Night	Optional	
Power Supply at Night	Optional	
I-V Curve Scan	Optional	
General Data		
Operating Temperature Range (℃)	-30 ~ +60	
Storage Temperature (℃)	-40 ~ +70	
Relative Humidity	0 ~ 100%	
Max. Operating Altitude (m)	4000	
Cooling Method	Smart Fan Cooling	
User Interface	LED, LCD (Optional) ,WLAN+APP	
Communication	RS485, WiFi or LAN or 4G	
Communication Protocols	Modbus-RTU	

Technical Data	GW80K-SMT	GW75K-SMT
Weight (Kg)	64	
Dimension (W×H×D mm)	700 x 550 x 260	
Noise Emission (dB)	<65	
Topology	Non-isolated	
Self-consumption at Night (W)	<1	
Ingress Protection Rating	IP66	
Anti-corrosion Class	C4, C5 (Optional)	
DC Connector	MC4 (4~6mm^2)	
AC Connector	OT/DT terminal (Max. 150mm^2)	
Environmental Category	4K4H	
Pollution Degree	III	
Overvoltage Category	DCII / ACIII	
Protective class	I	
The Decisive Voltage Class (DVC)	PV: C AC: C com: A	
Active Anti-islanding Method	AFDPF + AQDPF	
Country of Manufacture	China	

NOTE:
*1: When the input voltage is between 1000V and 1100V, the inverter enters the waiting mode. When the voltage returns to 180V to 1000V, the inverter will resume normal operation.

11 Term Explanation

Overvoltage category definition
Category I: Applies to equipment connected to a circuit where measures have been taken to reduce transient overvoltage to a low level.
Category II: Applies to equipment not permanently connected to the installation. Examples are appliances, portables tools and other plug-connected equipment.
Category III: Applies to a fixed equipment downstream, including the main distribution board. Examples are switchgear and other equipment in an industrial installation.
Category IV: Applies to equipment permanently connected at the origin of an installation (upstream of the main distribution board). Examples are electricity meters, primary over-current protection equipment and other equipment connected directly to outdoor open lines.

Moisture location category definition

Parameters	Level		
	3K3	4K2	4K4H
Moisture Parameters	0 - +40℃	-33 - +40℃	-33 - +40℃
Temperature Range	5% - 85%	15% - 100%	4% - 100%

Environment category definition
Outdoor: Ambient Temperature: -25~+60℃, applied to Pollution Degree 3 environment.
Indoor Unconditioned: Ambient Temperature: -25~+40℃, applied to Pollution Degree 3 environment.
Indoor conditioned: Ambient Temperature: 0~+40℃, applied to Pollution Degree 2 **environment.Outdoor:** Ambient Temperature: 0~+40℃, applied to Pollution Degree 2 environment.

Pollution degree definition
Pollution Degree I: No pollution or only dry, non-conductive pollution occurs. The pollution has no influence.
Pollution Degree II: Normally only non-conductive pollution occurs. Occasionally, however, a temporary conductivity caused by condensation must be expected.
Pollution Degree III: Conductive pollution occurs, or dry. non-conductive pollution occurs, which becomes conductive due to condensation, which is expected.
Pollution Degree IV: Persistent conductive pollution occurs, for example, the pollution caused by conductive dust, rain or snow.

GoodWe Website

GoodWe Technologies Co., Ltd.

No. 90 Zijin Rd., New District, Suzhou, 215011, China

www.goodwe.com

service@goodwe.com

Local Contacts